PROJECT PROFILE

VT INDUSTRIES Architectural Wood Doors

# Target Stadium

**Project Profile:**

Opened in 2010, Target Field is the contemporary new home of the Minnesota Twins. The attractive 40,000-seat ballpark is located in the Warehouse District of downtown Minneapolis.

**Building Challenge:**

Target Field was designed to be a LEED® Silver-certified facility, with heightened attention to using sustainable building materials. The doors specified for inside the facility needed to assist in earning LEED points.

Sustainable doors were needed to help contribute credit toward LEED Silver Certification.

The high-profile project required doors that conveyed premium distinction and professionalism.

**VT's Contribution:**

VT Industries manufactured 324 doors for the Target Field project. These doors include quarter sliced Douglas fir, white maple, and walnut flush wood veneer with custom finishes, some customized with Twin City logo. The doors utilized FSC® certified stave cores to assist with the LEED® certification process.

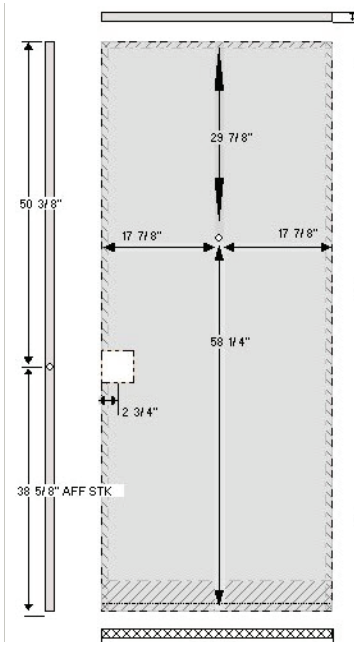


*Distinct, custom finishes and team logos with a commitment to sustainability*

*We make beautiful, high-performing doors.*